LTR	Zone	REVISION RECORD / Description	DWN/CHK	DATE	LTR	Zone	REVISION RECORD / Description	DWN/CHK	DATE
1		New Release		FEB/26/07					
2		Add Tube		Mpr/11/07					

DRAWING NUMBER
JS0_NO1402-S0X

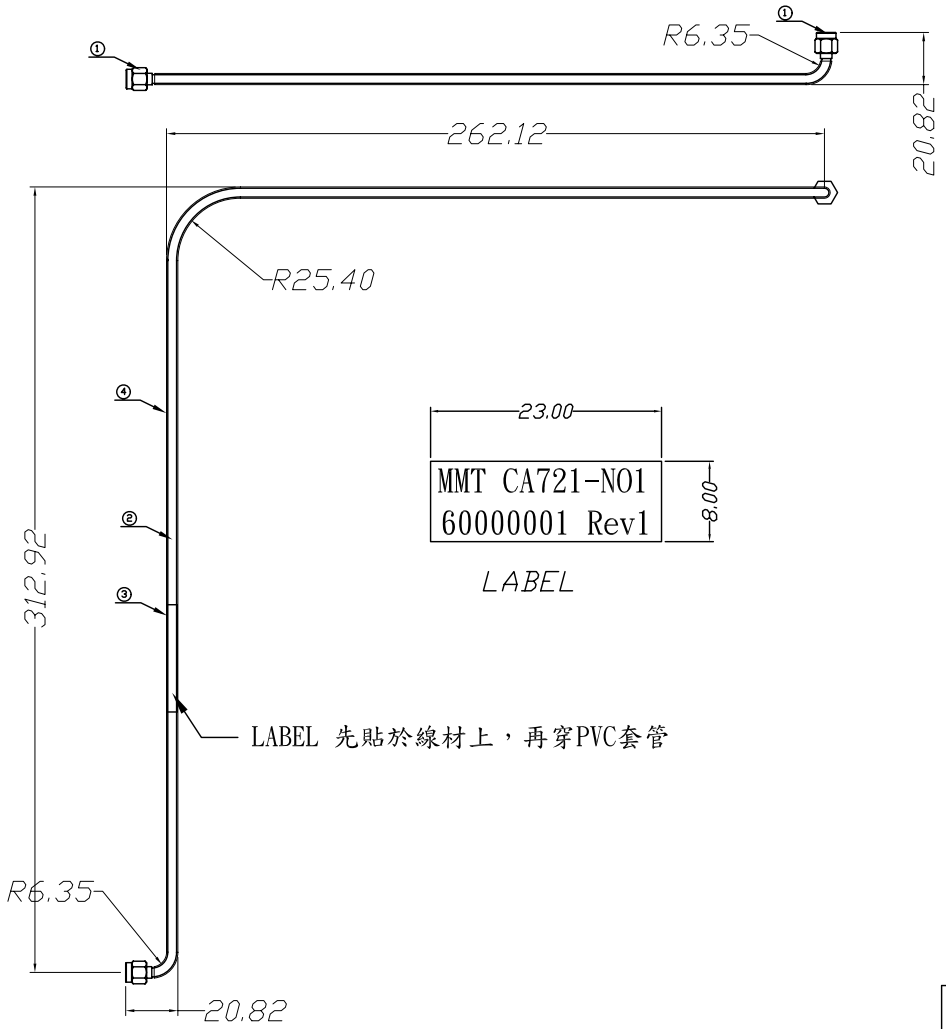

1.LABEL CABLE WITH:MFG NAME,MFG PAPT NUMBER ,EXALT PAPT NUMBER AND REV LEVEL .LOCATE APPROX ,WHERE SHOWN

NO	DESCRIPTION	Q'ty	MATERIAL	Part Number
4	PVC Tube OD4.5 ID3.7mm 透明			M05-PVCD45-37
3	LABEL H8 * L23mm 銅版紙 white	1		M12-008X24-WH
2	0.141 Semi-Rigid COAX CABLE	1		M02-SRG141-00
1	CONNECTOR SMA MALE	2	Brass	M01-141SMA-MM

UNIT mm	APVD	DESCRIPTION: JC RG402 SMA PLUG-SMA PLUG	
MATERIAL SEE NOTE	CHK	DIMENSION: 1 PLC ±0.1, 2 PLC ±0.05, 3 PLC ±0.005, ANGLES ±1°	PART NUMBER JS0_NO1402-S0X / REV 1
FINISH SEE NOTE	DWN csh	SIZE A4 / SCALE 1/1	SHEET 1 OF 1